Aerospace Manufacturing Core
Study Guide

"AMCSG-302"

Blueprints & Documents

Elements & Terminology

Blueprint Elements

Border

- Marks the boundaries of blueprint
- Some blueprints have letters and numbers in the border for navigational aid to quickly locate items

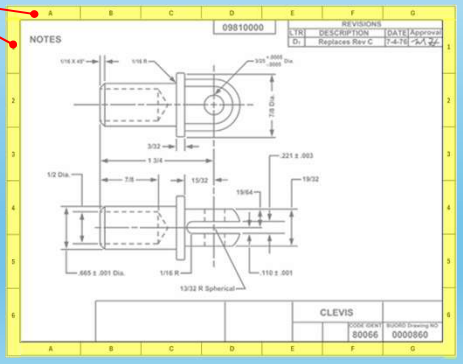

(PD) U.S. Gov – NAVEDTRA14040A, 2015

- ChatGPT query identified USGovernment public domain document: https://media.defense.gov/2017/Nov/03/2002658619/-1/-1/1/171103-N-ZY182-15347.pdf

Title Block

- Important information listed here

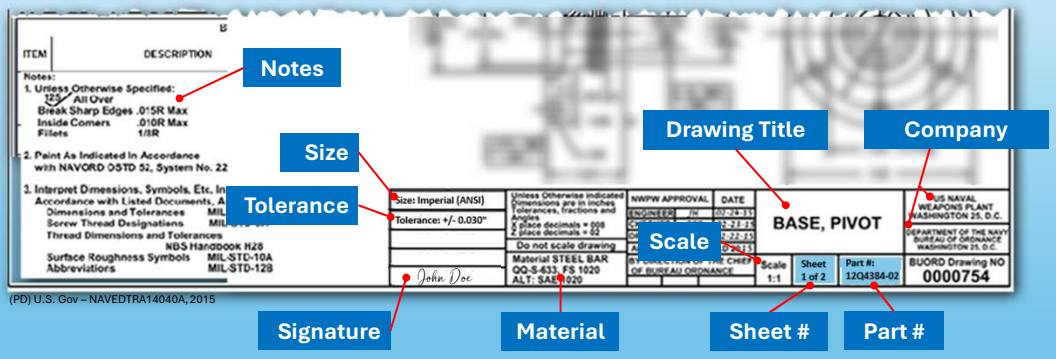

(PD) U.S. Gov – NAVEDTRA14040A, 2015

- ChatGPT query identified USGovernment public domain document: https://media.defense.gov/2017/Nov/03/2002658619/-1/-1/1/171103-N-ZY182-15347.pdf
- Modified a lot too by adding in missing elements

Revision Block

- Change history list…

Revision # | What? | When? | Who?

REVISIONS

ECO#	REV.	DESCRIPTION	DATE	APPROVED
		PRELIMINARY RELEASE		R.G.
	A0	RELEASED FOR PRODUCTION	10-19-04	R.G.
2316	A1	REVISE TO MATCH BOM. CUSTOMER REV ADVANCE TO "A" REVISE PART MARKING LABEL TO ADD JOB NUMBER AND DATE CODE	01-05-05	C.H.
2280	B0	REVISE TO MATCH BOM REFLECTING CHANGE TO ITEMS #1, #2, #3 ADD EPOXY ADHESIVE AS ITEM #8, #9, PART MARKING CHANGED TO -02 NOTES #4 AND #8 ON SHEET 2 UPDATED	06-23-05	C.H.
2378	B1	REVISE TO MATCH BOM. CUSTOMER REV ADVANCE TO "B" REVISED SH 2, NOTES 5.1 AND 5.2, DOME TO PCB ASSY PROCEDURE	09-20-05	C.H.
2539	B2	REVISE TO ADD NOTE #15 TO SHEET 2; TO ESTABLISH SERIAL NUMBER APPLICATION AND CONTROL BY Q.C.	12-22-06	C.H.
2597	B3	REVISE TO ADD KAPTON TAPE NOTE #9 AND ADD TO SHEET 1	05-22-07	CH
2641	B4	MOVE NOTES 1-4 FROM S10022-D00-02 TO S10022-D12-00. ADD TEST AFTER NOTE #2 MOVE TEST FROM AFTER APPLYING KAPTON TAPE TO AFTER LAMINATING STATIC SHIELD. ADDED PROGRAMMING OF EEPROM AS STEP 1. RE-NUMBER NOTES AND FLAGS	10-29-07	CH
2756	B5	RAISED REV DUE TO CHANGES AFFECTED BY BOM ITEM #5 INCORRECT P/N FOR KAPTON TAPE. AND ITEM #9, BLANK LABEL CHANGE FROM A555-001-01 TO A555-006-01	08-18-08	CH
2945	B6	RAISED REV TO MATCH BOM. CHANGED SERIAL NUMBER NOTE ON LABEL DRAWING AND UPDATED REV ON BOM	07-14-11	CH

(PD) U.S. Gov – NAVEDTRA14040A, 2015

- ChatGPT query identified USGovernment public domain document: https://media.defense.gov/2017/Nov/03/2002658619/-1/-1/1/171103-N-ZY182-15347.pdf

Picture Area

- “The Object” - Where Detail, Assembly, or Installation diagrams reside
- Lines, words, and symbols used

Top View

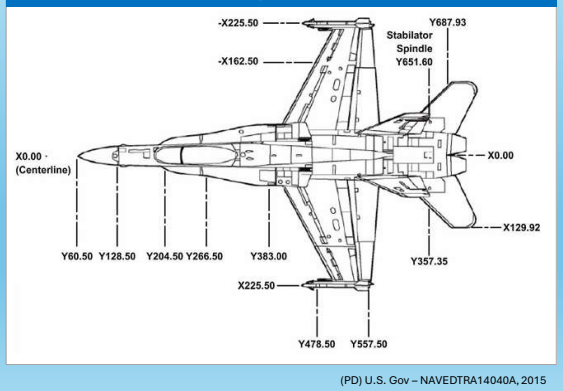

(PD) U.S. Gov – NAVEDTRA14040A, 2015

Right View

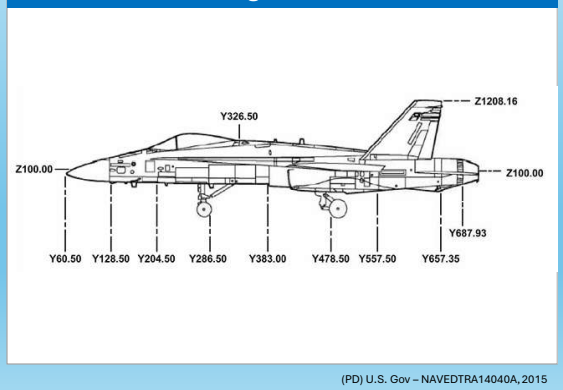

(PD) U.S. Gov – NAVEDTRA14040A, 2015

- ChatGPT query identified USGovernment public domain document: https://media.defense.gov/2017/Nov/03/2002658619/-1/-1/1/171103-N-ZY182-15347.pdf
- YES, THE F18 IS PUBLIC DOMAIN, US GOVT DOCUMENT FROM LINK ABOVE ON PAGE 10 (1-5)

Parts List

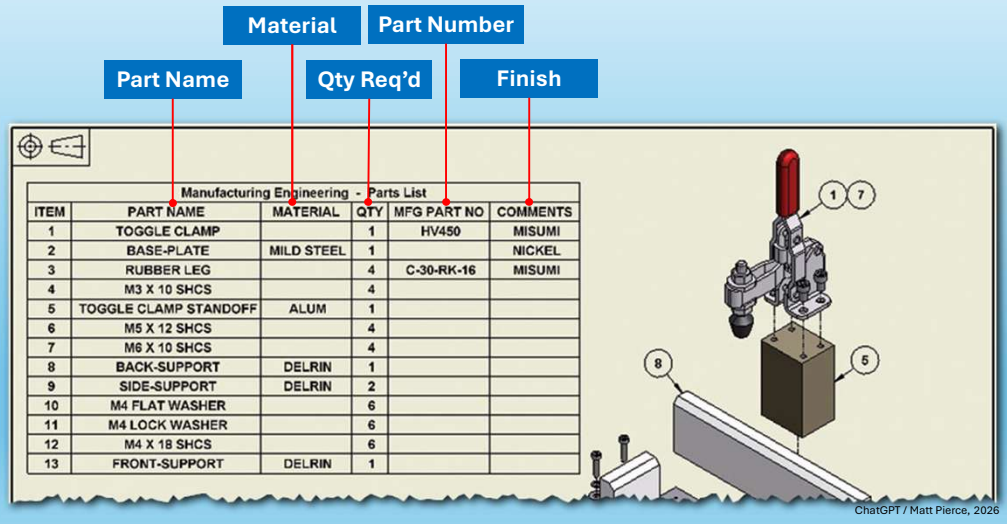

Manufacturing Engineering - Parts List

ITEM	PART NAME	MATERIAL	QTY	MFG PART NO	COMMENTS
1	TOGGLE CLAMP		1	HV450	MISUMI
2	BASE-PLATE	MILD STEEL	1		NICKEL
3	RUBBER LEG		4	C-30-RK-16	MISUMI
4	M3 X 10 SHCS		4		
5	TOGGLE CLAMP STANDOFF	ALUM	1		
6	M5 X 12 SHCS		4		
7	M6 X 10 SHCS		4		
8	BACK-SUPPORT	DELRIN	1		
9	SIDE-SUPPORT	DELRIN	2		
10	M4 FLAT WASHER		6		
11	M4 LOCK WASHER		6		
12	M4 X 18 SHCS		6		
13	FRONT-SUPPORT	DELRIN	1		

ChatGPT / Matt Pierce, 2026

- ChatGPT: Make a sample Parts List for an aerospace manufacturing blue print. Include: Part Number, Part Description, Quantity Required, Part Material Note, Part Finish Req.
  + make it a picture on a blueprint

Bill of Materials

BILL OF MATERIAL					
ITEM	DESCRIPTION	UNIT	ASSEMBLY OR FSN NO.	QUANTITIES	
				TROP	NORTH
3-1	LIGHTING CIRCUIT – NAVFAC DWG. NO. 203414	FT	3016	3	16
3-2	POWER BUS, 100A – NAV DWG. NO. 30413 1	FT	3047	1	20
3-3	RECEPTICAL CKT – NAV DWG. NO. 303660	EA	3019	2	1
3-4	BOX, RECEPTACLE W/CLAMP FO NONMETALLIC SHEATH WIRE	EA	5325-102-604	3	1
3-5	LAMP, ELECTRIC, MED BASE, INSTIDE FROSTED, 200 W, 120 V	EA	6240-180-314	60	6
3-6	PLUG: ATTACHMENT, 3 WIRE, 15 AMP, 125 V	HD	5936-102-309	10	1
3-7	PLATE: BRASS, DUPLEX RECEPTACLE	EA	5325-100-101	5	6
3-8	RECEPTACLE, DUPLEX, 3 WIRE, 15 AMP, 125 V	EA	5325-100-102	5	1
3-9	RCO, GROUND, 3/4" X 10' 0"	EA	3325-800-101	12	1
3-10	WIRE NO 2 1/C STRANDED, HARD DRAWN, BARE	EA	6143-134-200	52	1
3-11	SWITCH, SAFETY 2 P, ST 30 AMP, 250 V PLUS FUSE	EA	5930-142-401	2	1
3-12	CLAMP, GROUND ROD	EA	5009-100-101	13	13
3-13	SWITCH, SAFETY, 200 AMP, 250 V, 3 P	EA	6930-201-903	1	1
3-14	FUSE, RENEWABLE 200 AMP, 250 V	EA	6920-100-000	6	6
3-15	LINK FUSE, 200 AMP, 250 V	EA	6920-100-001	6	6
3-16	FUSE PLUG, 30 AMP, 125 V	EA	6920-100-102	12	12

(PD) U.S. Gov – NAVEDTRA14040A, 2015

- ChatGPT query identified USGovernment public domain document: https://media.defense.gov/2017/Nov/03/2002658619/-1/-1/1/171103-N-ZY182-15347.pdf
  pg 11

Blueprint Terminology

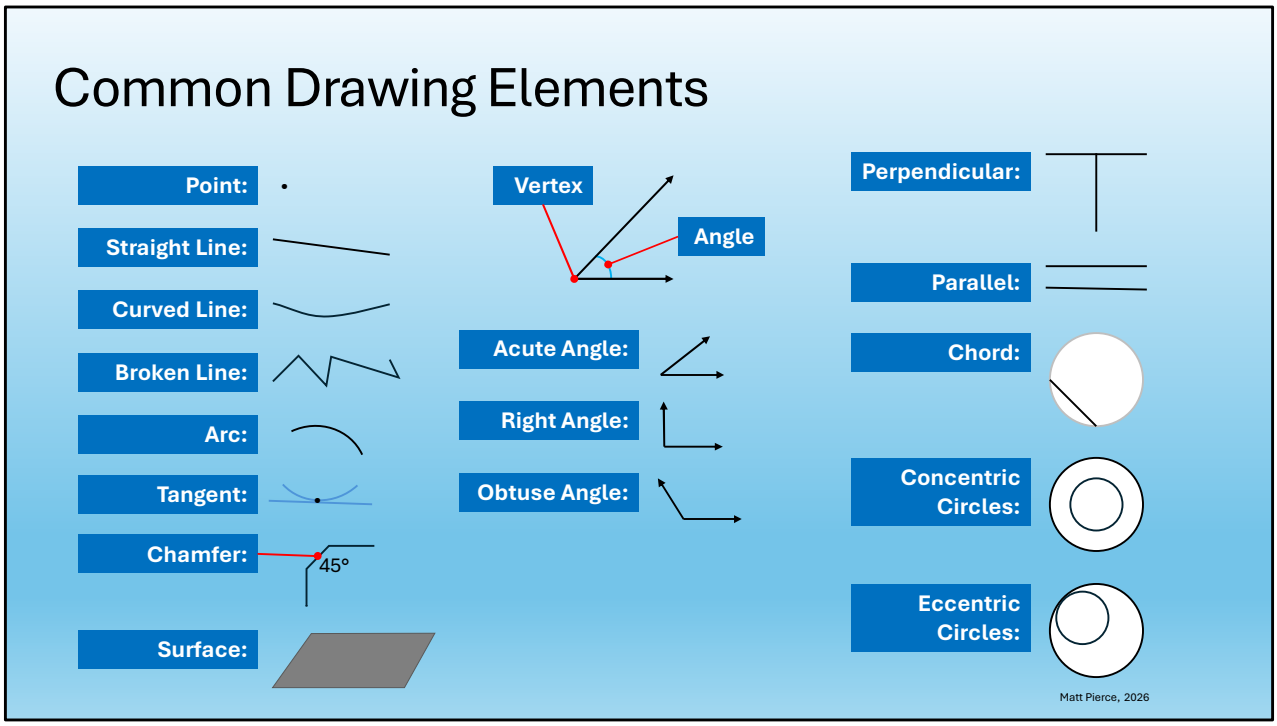

- ChatGPT: make a sample revision block from blueprint for aerospace manufacturing

Types of Pictorial Drawings

- There are three type of pictorial drawings…

Perspective:

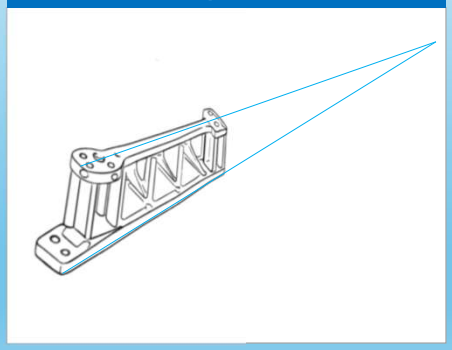

ChatGPT / Matt Pierce, 2026

Isometric:

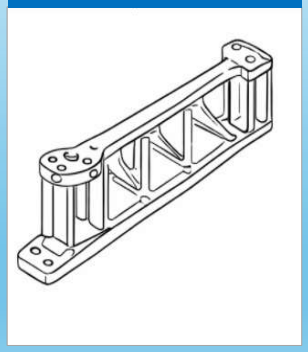

ChatGPT / Matt Pierce, 2026

Orthographic:

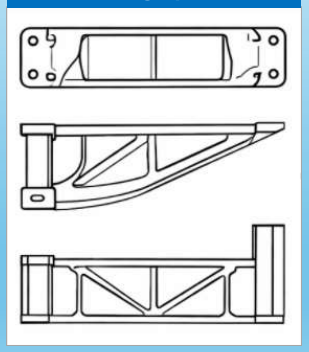

ChatGPT / Matt Pierce, 2026

- ChatGPT: Show the same aerospace manufacturing drawing in three different formats: 1. perspective drawing, 2. isometric drawing, and 3. orthographic drawing
  + make the perspective drawing (#1) more pronounced, make the perspective point closer in.

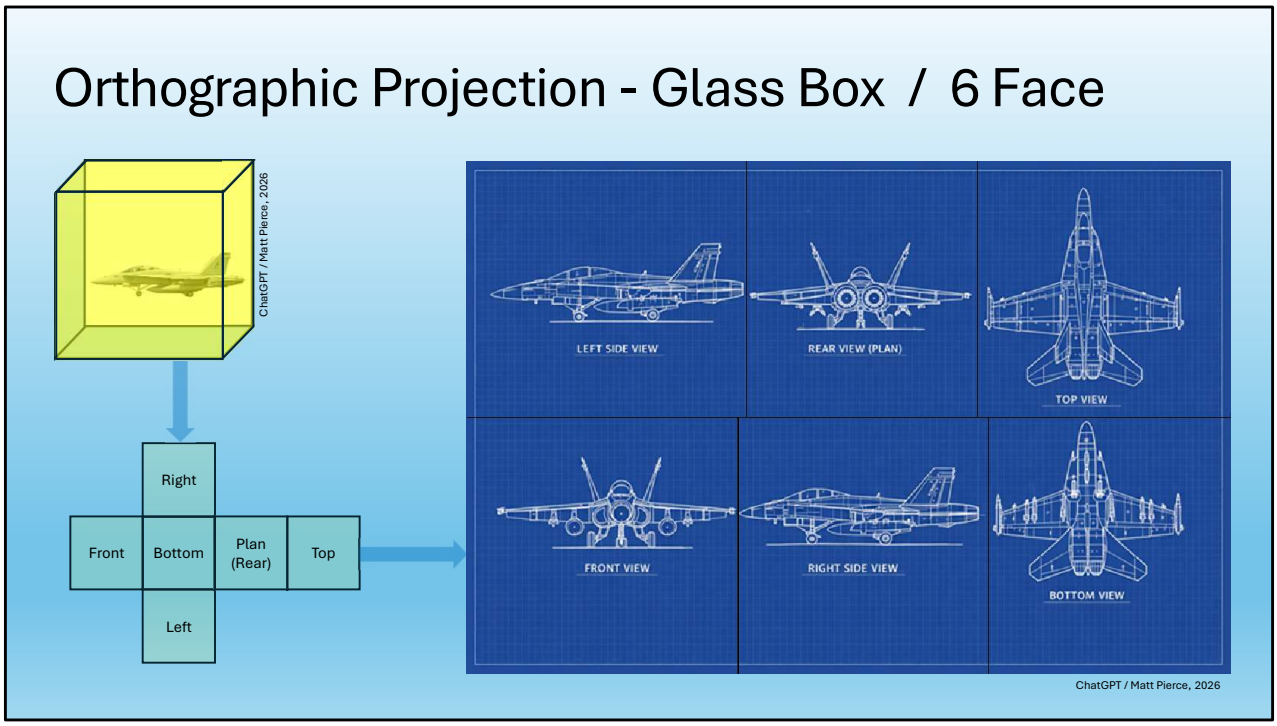

- ChatGPT: make six blueprint diagrams showing me all angles of an F18 fight jet from us government public domain sources. left side, plan (rear), top, front, right side, bottom
  + make the left side view only into a photograph
- + remove the background. jet only.

Aircraft Reference Planes (Axes)

STA	Longitudinal	Nose-to-Tail	Length	0 = Before Front of Plane
BL	Lateral	Wingtip-to-Wingtip	Width	0 = Center of Plane
WL	Vertical	Wheels-to-Tailtop	Height	0 = Below Plane

Start with prior slide ChatGPT images, then add planes

- ChatGPT: make six blueprint diagrams showing me all angles of an F18 fight jet from us government public domain sources. left side, plan (rear), top, front, right side, bottom
  + make the left side view only into a photograph
  + remove the background. jet only.
  + rotate this photo in a third dimension and then draw the STA (station line) axis, the WL (water line) axis, and BL (buttock line) axis. Make the axes in red line with long dashes and dots.
  + remove red axes
  + remove background

Q&A

Practice Q&A's (Q1-Q8)

Q1: Name for the edges of a blueprint, often broken down by letters and numbers for an easy lookup grid?

A: Border

Q2: Name two components of the Title Block beyond the Drawing Title and Sheet Number?

A: Company. Scale. Part Number. Notes. General Tolerances. Signature. Size. Material.

Q3: What columns are in the Revision Block?

A: Revision Number. Description. Date. Approved By.

Q4: What goes in the Picture Area?

A: Lines, words, and symbols to depict aircraft under construction

Q5: What columns are in the Parts List?

A: Part Number. Part Name. Quantity Received. Finish. Optionally: Material, Sequential Item Number.

Q6: What columns are in the Bill of Materials?

A: Item number. Description. Units. Assembly or FSN No. Quantity Ordered. Quantity Delivered.

Q7: How is a "Bill of Materials" different from a "Parts List"?

A1: Parts list is simpler static drawing based list of parts or assemblies on the sheet.

A2: BOM list is comprehensive dynamic list containing every part, material, sub-assembly, and instruction.

Q8: How many points are needed to define a straight line?

A: Two

Practice Q&A's (Q9-Q18)

Q9: How many points are in a curved lined?

A: Infinite

Q10: Three points make a ___?

A: Surface (or plane)

Q11: Name of a line forming part of a circle?

A: Arc.

Q12: Name of the point where an arc touches a line?

A: Tangent

Q13: Name of two lines coming together at a point.

A: Angle

Q14: Name of the point where two lines form an angle?

A: Vertex.

Q15: Name of two lines intersecting at 90°?

A: Perpendicular.

Q16: Name of an angle less than 90°?

A: Acute Angle

Q17: Name of an angle greater than 90°?

A: Obtuse Angle

Q18: Name of two different size circles both centered at the same point?

A: Concentric Circles

Practice Q&A's (Q19-Q26)

Q19: Name of two different size circles both centered at different points with the smaller inside the larger?

A: Eccentric Circles

Q20: Name of drawing view that is how the human eye perceives?

A: Perspective

Q21: What columns are in the Revision Block?

A: Revision Number. Description. Date. Approved By.

Q22: Name of drawing type that is similar to perspective, but has no vanishing point?

A: Isometric

Q23: Name of drawing type used in blueprints to show three different faces: Front, Top, and Right?

A: Orthographic.

Q24: Name of aircraft reference plane that is longitudunal, running nose-to-tail…the length?

A: Station Line (STA)

Q25: Name of aircraft reference plane that is laterial, running wingtip-to-wingtip…the width?

A: Buttock Line (BL).

Q26: Name of aircraft reference plane that is vertical, running wheels to tailtop…the height?

A: Water Line (WL)
… like a boat (from Boeing's shipbuilding start)

Practice Q&A's (Q1-Q8)

Q1: Name for the edges of a blueprint, often broken down by letters and numbers for an easy lookup grid?

A: Border

Q2: Name two components of the Title Block beyond the Drawing Title and Sheet Number?

A: Company. Scale. Part Number. Notes. General Tolerances. Signature. Size. Material.

Q3: What columns are in the Revision Block?

A: Revision Number. Description. Date. Approved By.

Q4: What goes in the Picture Area?

A: Lines, words, and symbols to depict aircraft under construction

Q5: What columns are in the Parts List?

A: Part Number. Part Name. Quantity Received. Finish. Optionally: Material, Sequential Item Number.

Q6: What columns are in the Bill of Materials?

A: Item number. Description. Units. Assembly or FSN No. Quantity Ordered. Quantity Delivered.

Q7: How is a "Bill of Materials" different from a "Parts List"?

A1: Parts list is simpler static drawing based list of parts or assemblies on the sheet.

A2: BOM list is comprehensive dynamic list containing every part, material, sub-assembly, and instruction.

Q8: How many points are needed to define a straight line?

A: Two

Thank You

Matt Pierce - mpierce710006@gmail.com - linkedin.com/in/mpiercead576/

https://github.com/DataResearchLabs/study_guide_intro_aerospace_mfg